PRACTICAL NO:-07

AIM:-to verify operation of a counter using logism.
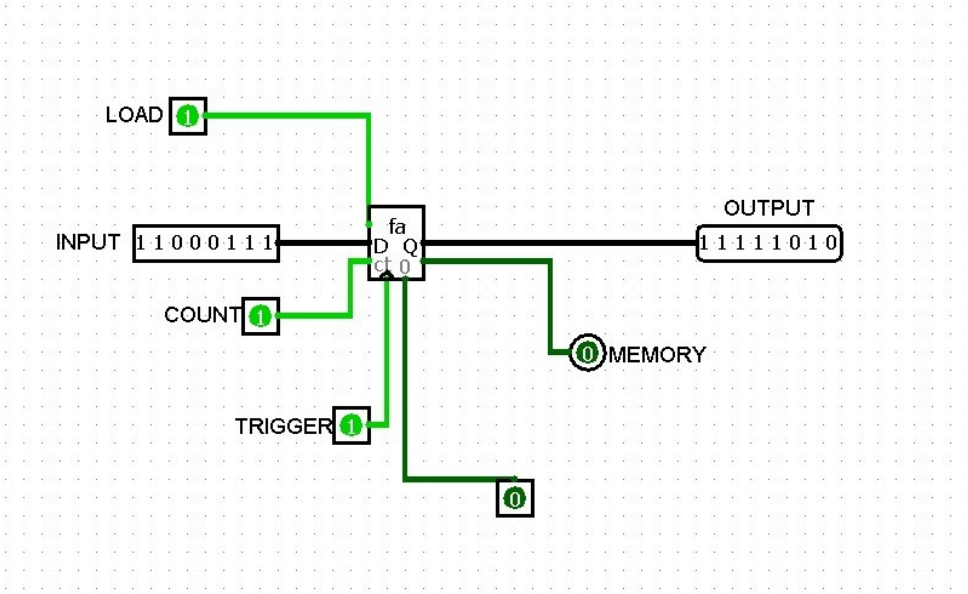
COUNTER:-